93 Push-to-Close Latch · Push Button to Open



- **Push button opening**
- **Single hole installation**
- **Optional ejector spring helps prevent rattles**

Material and Finish

Latch: ABS, black
Spring: Stainless steel

Performance Details

Max. working load: 530 N (120 lbf)

Flammability rating: UL94-HB

Installation Notes

Max. tightening torque on mounting nut: 7.9 N·m (70 in·lbf)

Accessories

Flat key, keyed alike CH751
(2 keys per ring)
Part number: PK-10-01



Overmolded key, keyed alike CH751
(2 keys per ring)
Part number: PK-10-01-05



Pull tab (optional) part number:
In-line 93-21-301-14
Perpendicular 93-21-322-14

Keeper (replacement) part number:
93-14-101-24

Ejector spring (optional)
part number: 93-22-302-18

Part Number

See table

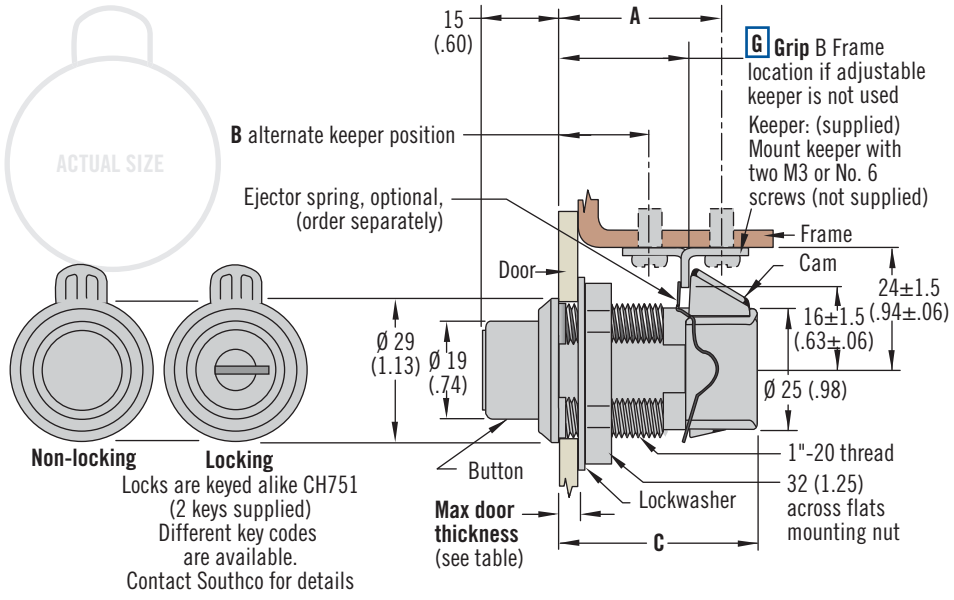

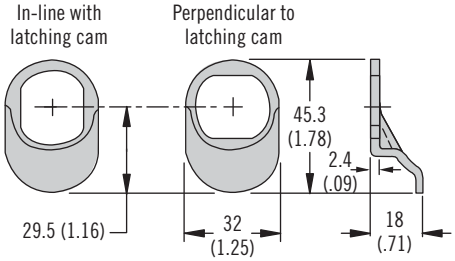

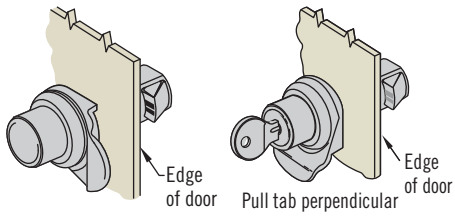

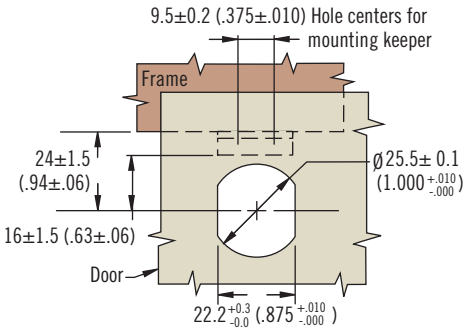

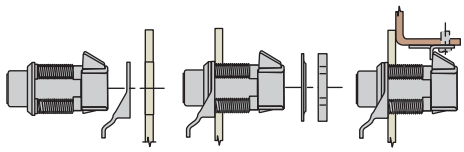

7.9 N·m (70 in·lbf) Max. tightening torque for mounting nut

Style	Max. Door Thickness	G Grip	Dimensions			Latch Part Number	
			A	B	C Ref	Key-Locking (2 Flat Keys Supplied)	Non-Locking
Pull tab in-line with latching Cam	10.3 (.407)	23 +0.1 -.07 (.907 +0 -.032)	29.5±1.5 (1.16±.06)	14.5±1.5 (.57±.06)	37 (1.47)	93-303	93-304
Pull tab perpendicular to latching Cam	10.3 (.407)	23 +0.1 -.07 (.907 +0 -.032)	29.5±1.5 (1.16±.06)	14.5±1.5 (.57±.06	37 (1.47)	93-313	93-314
Latch only	12.7 (.500)	25±0.4 (1.000 +0 -.032)	32±1.5 (1.25±.06	17±1.5 (.66±.06)	40 (1.57)	93-307	93-308