MP Point Push-to-Close Latch · Keepers & Cover

Fixed Keeper

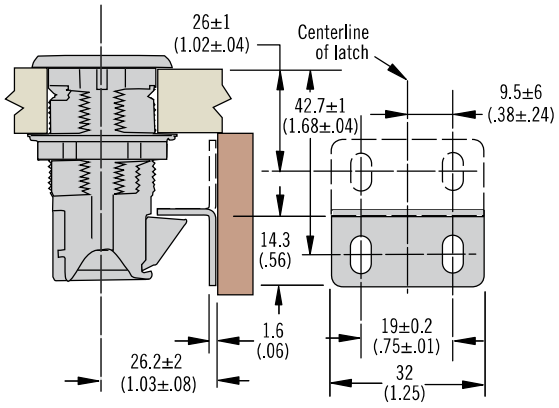

Fixed Keeper
M1-519-4

Hooded Keeper

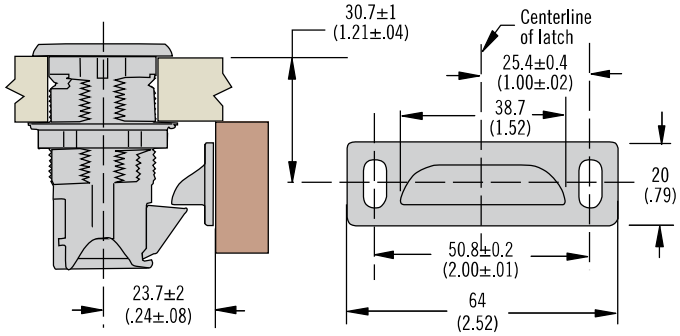

Hooded Keeper
MP-510-16-4

Adjustable Keeper

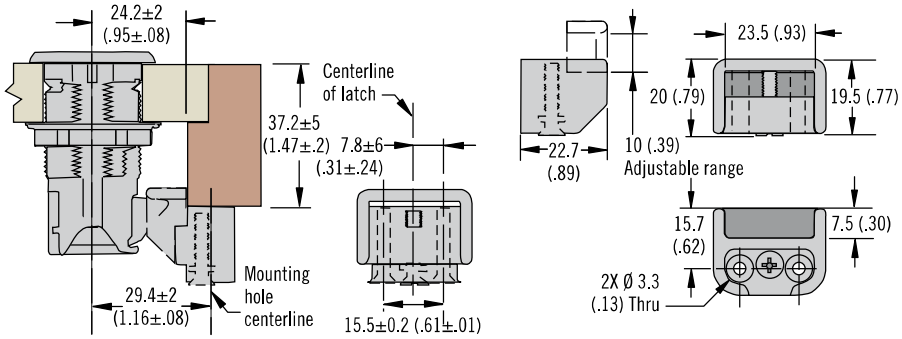

Adjustable Keeper
MP-5113

Optional Cover

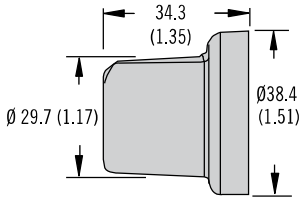

Optional Cover	
Bright Chrome Plated	**Satin Chrome Plated**
MP-510-84-1	MP-510-84-2



- **Keeper sold separately**

Material and Finish

Fixed keeper: Stainless steel

Hooded keeper: Nylon, black

Adjustable keeper: Acetal, black with brass adjusting screw

Cover: Polycarbonate ABS, bright or satin chrome plated

Installation Notes

Fixed keeper: Use M5 or No. 10 screws to mount (not supplied)

Hooded keeper: Use M5 or No. 10 screws to mount (not supplied)

Adjustable keeper: Use M3 x 25 (No. 5 x 1.00) screws to mount (not supplied)

Optional cover:
Suitable for door thickness from 16 - 20 (.630 - .787)