MP Polar · Push-to-Close Latch



- **Suitable for applications with soft-close-drawer runners**
- **Sleek style and design provides a clean look**
- **Simple operation for interior applications only**

Material and Finish:

Drawer cup: ABS, Handle: PC/ABS, see part number table for finish
Latch housing: Nylon black
Keeper body & rocker arm: Glass filled nylon black
Latching Pin: Die cast zinc chrome plated
Springs: 302 stainless steel passivated
Magnets: Neodymium iron boron nickel plated
Screws (4 supplied): Stainless steel black

Performance Detail:

Max. static load: 545 N (122 lbs)

Operation



Handle Up
(Pin engaged)



Handle Down
(Pin disengaged)

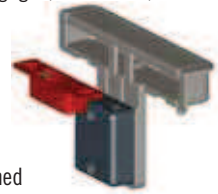

Unlatched

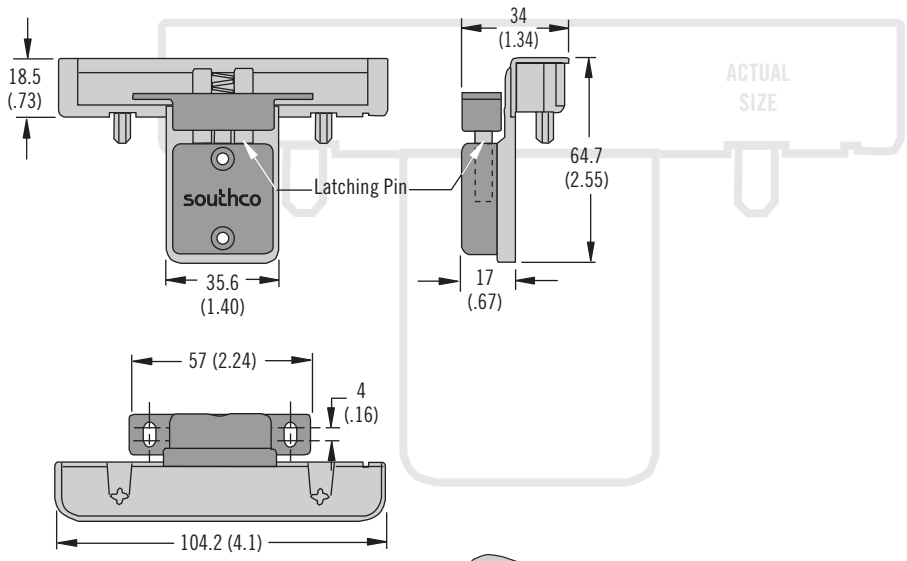

Panel Preparation

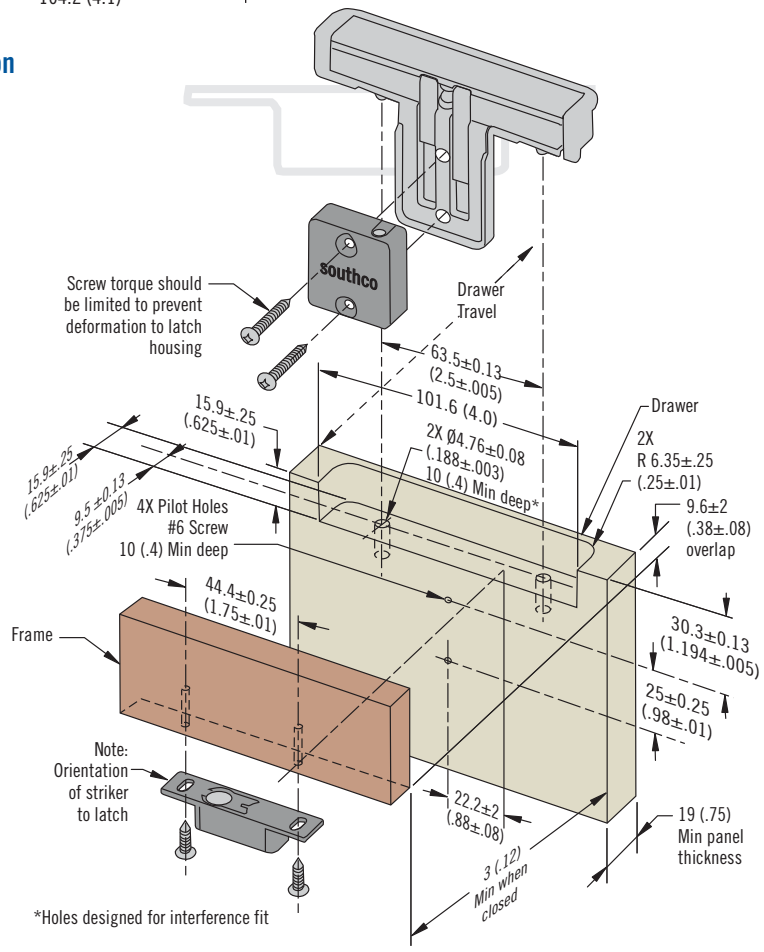

MP - 04 - 33 - F

F Finish

11 Polished chrome	**44** Polished brass
22 Satin chrome	**55** Black