MM Talon Sliding Entry Door Latch

Flush style, star and standard

Panel Preparation

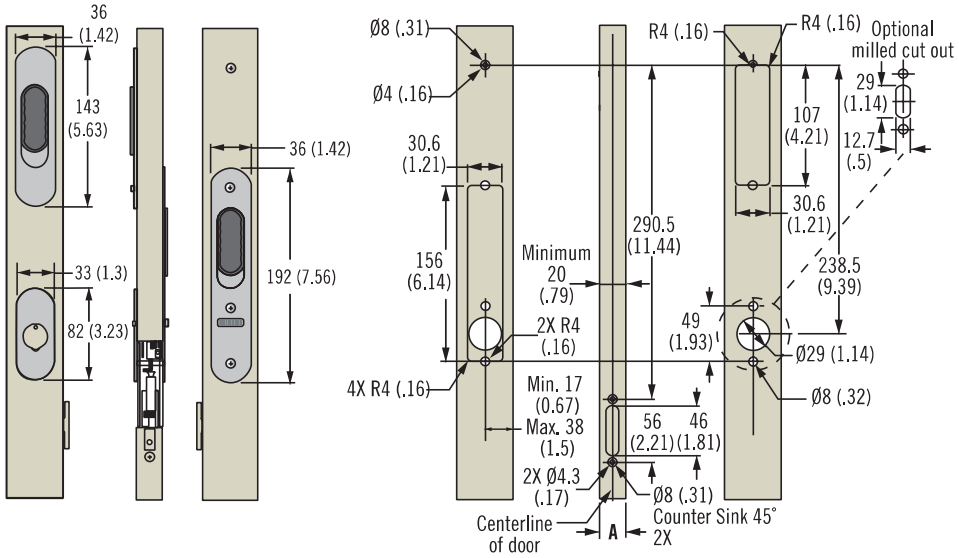

Star Part Numbers					
		Door Thickness (A)			
Finish	Style	20.5 (0.81) - 23 (0.91)	23 (0.91) - 28.5 (1.12)	28.5 (1.12) - 33.5 (1.32)	33.5 (1.32) - 38 (1.50)
Chrome	Standard	MM-01-130-10	MM-01-131-10	MM-01-132-10	MM-01-133-10
	Standard Top Stop feature	MM-01-430-10	MM-01-431-10	MM-01-432-10	MM-01-433-10
Black Powder Coated	Standard	MM-01-130-50	MM-01-131-50	MM-01-132-50	MM-01-133-50
	Standard Top Stop feature	MM-01-430-50	MM-01-431-50	MM-01-432-50	MM-01-433-50

Talon Part Numbers				
Without Key locking* (egress opening from outside)	Door Thickness Range			
	20.5 (.81) - 23 (.91)	22.5 (.87) - 27 (1.06)	27 (1.06) - 34.5 (1.38)	28.5 (1.13) - 38 (1.5)
Anodized aluminum	MM-01-100-60	MM-01-101-60	MM-01-102-60	MM-01-103-60
Powder coated black aluminum	MM-01-100-50	MM-01-101-50	MM-01-102-50	MM-01-103-50
Chrome	MM-01-100-10	MM-01-101-10	MM-01-102-10	MM-01-103-10
Key locking				
Anodized aluminum	MM-01-110-60	MM-01-111-60	MM-01-112-60	MM-01-113-60
Powder coated black aluminum	MM-01-110-50	MM-01-111-50	MM-01-112-50	MM-01-113-50
Chrome	MM-01-110-10	MM-01-111-10	MM-01-112-10	MM-01-113-10

Talon Accessories	
Mounting tool for striker	MM-90-103-41
Top Stop	MM-7520
High-seas handles for chrome Talon	MM-7660
High-seas handles for black Talon	MM-7683

For top stop installation please refer to website.

For high seas handle installation please refer to website.

- **New superior Star Key Lock capability provides enhanced, three-axis pin tumbler security**
- **Top-stop latching feature provides option to secure door in the full open, full closed, or partially open positions, prevents accidental closing even in rough seas**
- **Attractive flush face design provides sleek look that complements a wide range of boats**
- **Optional high-seas handle provides sturdy grip for both latch and door operation**
- **Designed for doors in stainless steel and aluminum extrusions**

Material and Finish

Escutcheons, outside plate: Aluminum, chrome plated or black powder coat